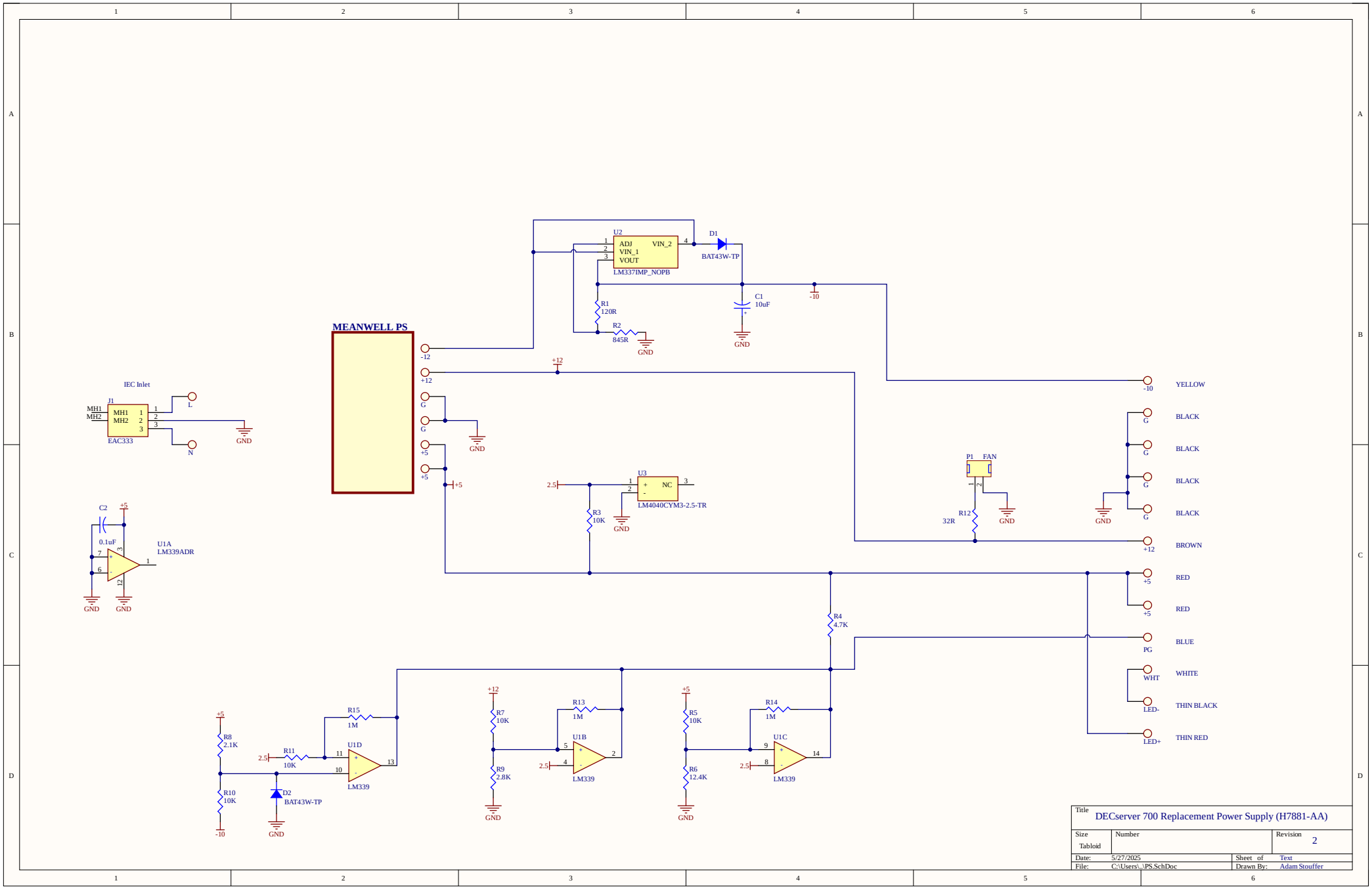
MEANWELL PS
-12
+12
G
G
+5
+5
U2
ADJ
VIN_1
VOUT
VIN_2
LM337IMP_NOPB
D1
BAT43W-TP
R1
120R
R2
845R
C1
10uF
-10
GND
IEC Inlet
J1
MH1
MH2
EAC333
L
N
U3
NC
LM4040CYM3-2.5-TR
2.5
R3
10K
P1
FAN
R12
32R
C2
0.1uF
U1A
LM339ADR
R4
4.7K
R15
1M
R11
10K
U1D
LM339
R8
2.1K
R10
10K
D2
BAT43W-TP
R7
10K
R9
2.8K
R13
1M
U1B
LM339
R5
10K
R6
12.4K
R14
1M
U1C
LM339
YELLOW
BLACK
BLACK
BLACK
BLACK
BROWN
RED
RED
BLUE
WHITE
THIN BLACK
THIN RED
PG
WHT
LED-
LED+
Title
DECserver 700 Replacement Power Supply (H7881-AA)
Size
Tabloid
Number
Revision
2
Date:
5/27/2025
Sheet of
Text
File:
C:\Users\...\PS.SchDoc
Drawn By:
Adam Stouffer